CleanCarbon

DeFi Response

to World Pollution

www.CleanCarbon.io

v 2.0

Table of Contents

Words from the founders	3
The BIG problem	4
CleanCarbon solution	5
Unique business model	6
Waste-to-Energy technology	8
Use of syngas	10
The unit specification	11
The Pilot Project	12
Revenue streams	14
Expansion plans	16
CARBO token	17
Physical CARBO utilities	18
CleanCarbon platform	19
Mobile wallet	22
CleanCarbon treasury	23
Built-in incentives	24
CARBO resilience	27
Token distribution	28
Global presale	29
Additional funding	30
Revenue forecasts	32
The legal structure	34
Core Team	35
Roadmap	37
Disclaimer	39

CleanCarbon

Words from the founders

UDO ABRAHAM - CEO

The CleanCarbon project has a long-term vision and quickly implements its ideas. Our goal is to stay on the market and grow in the next 5, 10 or 20 years and beyond!

My role as CEO is to oversee the business as a whole and make sure we are moving in the right direction with every critical decision we make.

I will mainly work on the physical installations, essential partnerships, and all necessary legal requirements to move the project forward.

The idea for the CleanCarbon project has been in my head for several years and I am convinced that now is the perfect time to implement it. We have the right team and the right attitude to build something extraordinary.

MICHAL POMYKALA - CTO

In my professional career, I've seen projects come and go. I've helped build multi-million dollar startups, but also encountered obstacles along the way.

As a result, I understand what it takes to get started and run a successful large-scale blockchain project.

My job is to build and maintain all the necessary tools and technical systems around the CARBO token, IT and blockchain applications, and multimedia content. I'm also very active on Discord (scitecx - CleanCarbon.io CTO), and I will gladly answer any technical questions you may have!

I'm full-time involved and 100% dedicated to the CleanCarbon project and CARBO token. I will help it to become one of the blockchain success stories of 2022 and beyond.

The BIG Problem

It is comforting that we become more aware of our impact on the environment. Whether it's because of government regulations or our informed decisions, more and more companies around the world have significantly reduced their carbon footprint.

It seems that things are finally heading in the right direction, but many of us are still concerned that perhaps the changes are not being implemented quickly enough.

Some places are lagging behind when it comes to using waste efficiently and recovering energy from used products.

This problem is especially highlighted on many islands around the world. Due to their geographic location and the high costs of waste disposal, governments and local businesses often struggle to find practical solutions to waste management.

For example, Fuerteventura, one of the Canary Islands in Spain, has been struggling with pollution for many years. Most of the waste from the entire island is stored in one place called Zurita.

Although the waste is already segregated, shipping it to mainland Spain is costly to handle properly. Therefore, most of Fuerteventura's waste ends up in landfills, and when there is not enough space, it is buried in the ground or even thrown into the ocean.

The actual picture from Zurita/Fuerteventura

CleanCarbon solution

Project CleanCarbon was born to address fundamental issues the companies and governments face when tackling pollution and restoring energy from waste products.

We believe that new emerging technologies are the missing pieces to create sustainable long-term solutions and raise much needed global awareness.

CleanCarbon is the first initiative that uses DeFi - Decentralised Finance as a driving vehicle to accomplish environmental goals faster and more effectively.

We implement new ideas into old business models, spark innovation, and speed up the transitions towards the planet we all want to live on.

Our solution connects two worlds; the new model of DeFi financial incentives with physical installations of the next-generation waste to energy systems.

Unique business model

We believe blockchain can and should offer more than just software solutions and financial incentives programmed into smart contracts.

Our approach is to unleash the full potential of next-generation DeFi technologies by combining software with hardware and creating multiple physical utilities for our token.

CleanCarbon has already started to build a next-generation waste-to-energy installation, starting with a R&D facility and the pilot project in Canary Islands. The next step will be an expansion with other plants around the world.

We will use the token launch (IDO) to partially fund our first installation, but the main reasons for choosing this particular business model go far beyond financial.

We will use the token to:

- Create a global community of investors
- Involve the community in decision making
- Build passive income streams for investors
- Build green incentives for local communities
- Create a payment method for our contractors
- Monitor our installation's data with dapp sensors
- Show what is possible with blockchain technology

We are convinced that implementing this type of business model will bring significant benefits to the project and everyone involved, both in the short and long term.

Unique business model

The funds collected during our global token presale will be partially used to finance the pilot project installation and partially to fund our treasury, responsible for blockchain and DeFi investments.

After our first Waste-to-Energy installation is completed and in operation, a part of its generated profits will be used to buy back our tokens from exchanges. The purchased tokens will then be burned, which will boost its price and create deflation.

The token side of the project will help finance the installation, and create extra project's utilities, while the physical side will help stabilize and increase the token's price in the future.

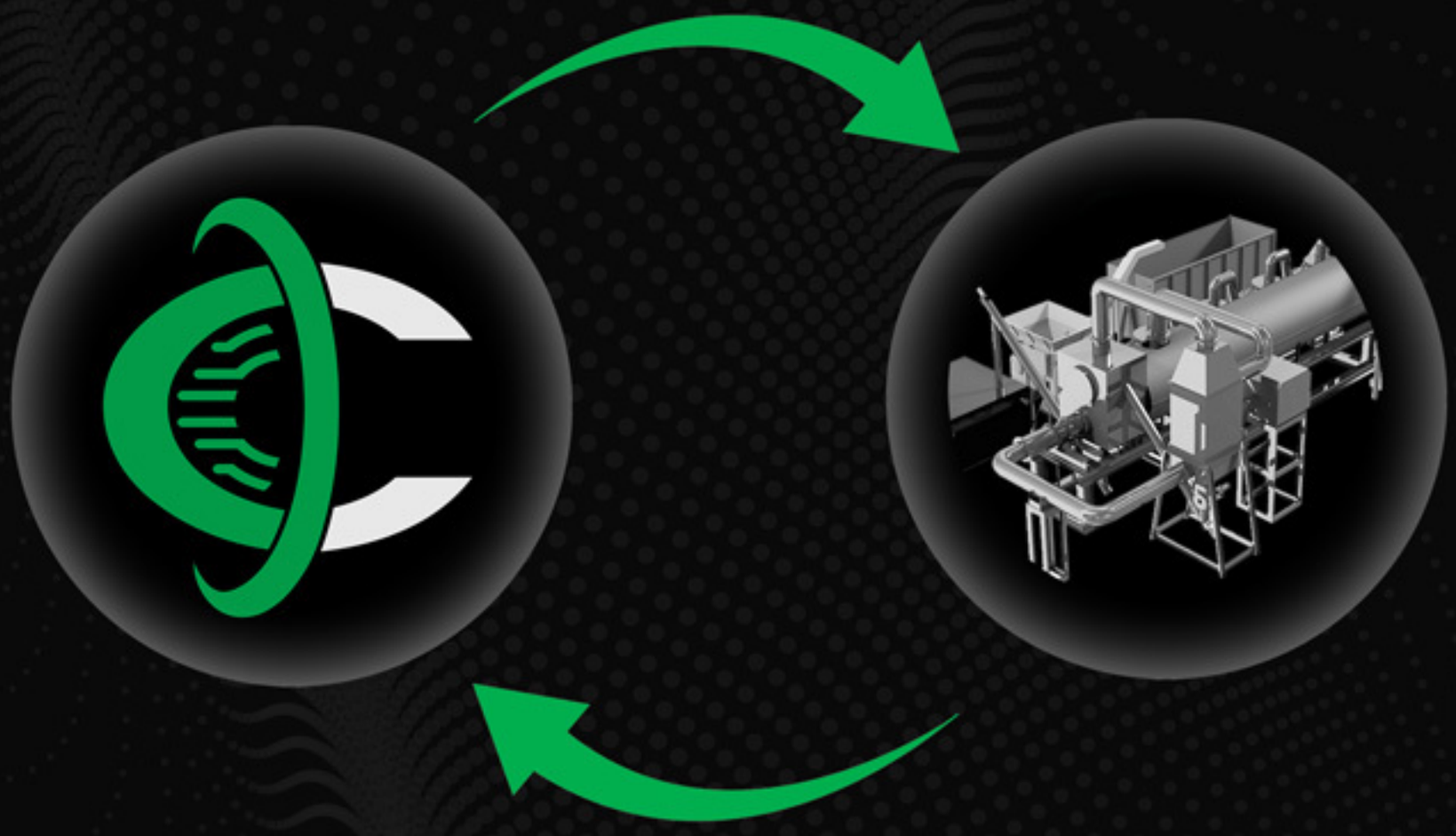

This is how both parts of the project work synergistically.

Furthermore, in case of any unforeseeable problems affecting one part of the CleanCarbon project, the other part will be able to step in and help.

Waste-to-Energy technology

The building blocks of the CleanCarbon project are physical Waste-to-Energy UHTG installations.

UHTG stands for ultra-high temperature gasification. It is a patented technology recently developed in Europe.

Our systems treat almost any type of waste, as long as it contains some organic products and the right amount of moisture.

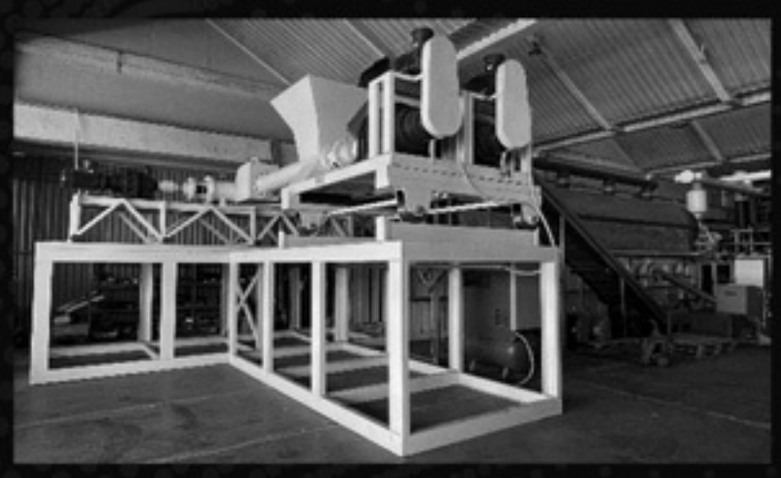

After treatment, the end product is formed as syngas, which is a high-energy hydrogen-containing mixture that can be used as a product in various industries.

Inorganic materials contained in the processed product are delivered separately. They can be easily collected and then sold or used by the company for other purposes.

The entire process is relatively simple and can be fully automated.

Waste-to-Energy technology

UHTG technology offers a new standard of efficiency, low cost and sophistication in waste treatment and energy recovery.

Other processes
(Pyrolysis, Plasma)

- Partial carbon destruction
- Toxic residue and smoke
- Contaminated final product
- Limited feedstock
- Limited energy recovery
- Expensive gas cleaning
- Expensive and inefficient

UHTG
(Ultra High-Temperature Gasification)

- Full carbon conversion
- No toxic residue
- No fire and no smoke
- Removes toxicity
- Highest energy recovery
- Compliant with regulations
- Efficient and 100% green

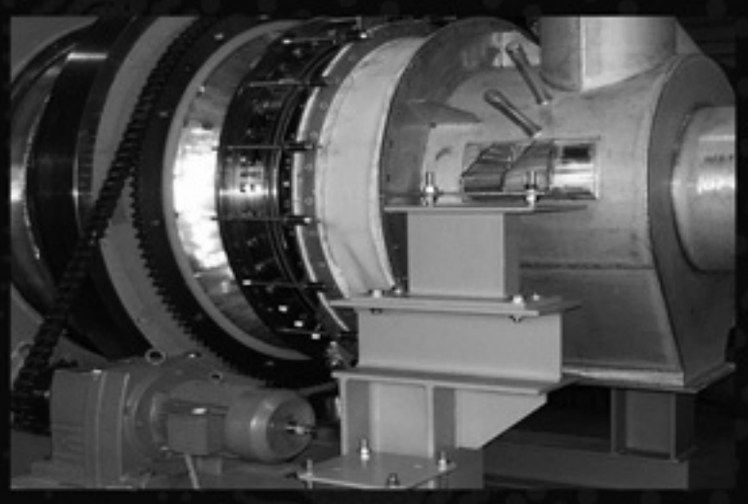

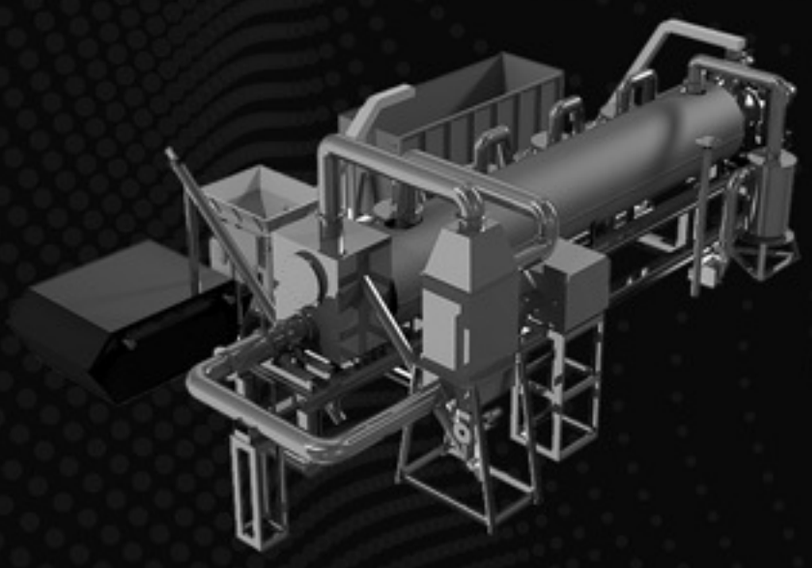

CleanCarbon has already partnered up with local and international companies to fully utilize our syngas and other byproducts from UHTG processes.

Our primary use of syngas will include hydrogen production and distribution, power generation from the excess heat, lactic acid drying, sale of the process byproducts, and more.

The details are discussed later in the text.

Use of syngas

Syngas contains about half the energy value of natural gas.
It consists mainly of hydrogen (H_2), carbon monoxide (CO), methane (CH_4) and a minimum amount of carbon dioxide (CO_2).

Syngas is a valuable, pure and ready-to-use product with a high hydrogen content that can be used in many ways:

Direct use through burning

Production of electricity

Production of chemicals

Liquid fuel e.g. methanol, diesel

Hydrogen separation

Use of waste heat

CleanCarbon will produce a very clean syngas containing between 40-75% hydrogen, depending on the type of waste available at any given time.

Our hydrogen will be easily separated from the synthesis gas and almost 100% used by the company as a product and in various downstream processes.

The unit specification

We will use two sizes of Waste-to-Energy units in our installations:

- the T25 for our main processes
- the T6 for Research & Development

Having a smaller T6 unit is also essential. It will allow us to determine how to treat various waste products, as they all require different moisture content and slight changes in the UHTG setup.

T6 unit

Throughput approx.: 6 t /day
Operating temperature : > 1100°C
Operating mode: Fully automatic
Daily syngas production: 192-312 kg
Processing: 1980 to / Y (330 days)

T25 unit

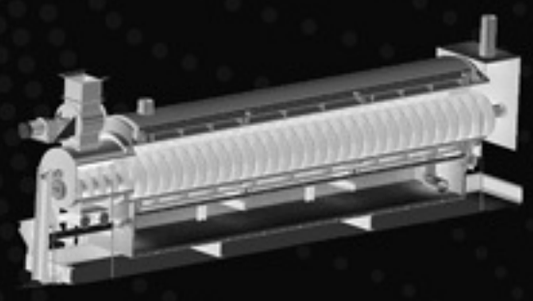

Throughput approx.: 25 t /day
Operating temperature : > 1100°C
Operating mode: Fully automatic
Daily syngas production: 800-1300 kg
Processing: 8250 to / Y (330 days)

The main benefits of the process:

- Decentralized UHTG technology can provide green hydrogen in relatively large quantities for various industries at very competitive prices.
- The energy consumption of the UHTG system can be covered after the separation of the hydrogen by the energy content of the remaining gases.
- With the UHTG technology, the buffering of excess energy can be used to make the balancing power available when needed.
- The UHTG technology significantly reduces disposal costs and allows running long-term operations.

The Pilot Project

Why Fuerteventura

The right place

Both CleanCarbon founders, as well as some other core team members, have been living in Fuerteventura for many years.

This helped us notice the problem and come up with a modern, effective solution such as CleanCarbon Pilot Project.

Sun and wind

Fuerteventura is one of the best-known Spanish islands famous for its all-year-round sunny weather and very strong winds.

These weather conditions are perfect to power our project installation in a very cost-effective way, using solar panels and wind turbines.

Favorable legal conditions

Fuerteventura is a part of the EU, and therefore in the last couple of years, it has been firmly pushed by Europe towards more use of renewable energies.

The local government here is also very sympathetic towards the CleanCarbon project, and we work with local partners who are well-connected with multiple branches of Fuerteventura's government.

The Pilot Project

Installation

The main operational unit will be constructed as close to the Zurita landfill as possible to ensure low operating costs.

The installation will consist of a construction hall, with the T25 unit inside it. We plan to power the entire project with 100% renewable energy, solar installation, wind turbines, and UHTG excess heat. Everything will be constructed right next to the Waste-to-Energy installation.

But depending on our final budget, we also have a backup plan to power everything by the grid, which may be used only as a temporary solution.

The main office of CleanCarbon will be located in Parque Technologico in Fuerteventura, which is the most prestigious location for tech-related startups on the island.

The smaller T6 UHTG unit will be used for R&D and be placed inside the facilities of Parque Technologico.

Revenue streams

Our revenue streams from the CleanCarbon installation will come from:

1. Production and use of hydrogen

This will be one of the largest revenue streams. By utilizing various waste products, we will produce syngas, which is very rich in hydrogen.

It will be sold and directed via pipelines to the nearby gas stations to power hydrogen cars and other future utilities.

Our local partners have many stations all over Fuerteventura and are willong to buy hydrogen from us as soon as we are ready with its production and distribution.

2. Waste disposal

The local government and many local companies will pay us well to utilize most of their unwanted waste products. Usually, these products end up in landfills (Zurita), waiting to be shipped to mainland Spain and adequately utilized.

However, the shipping process is costly, and therefore there is a lot of profit to be made in this industry.

Our main T25 unit will most likely be placed in the landfill itself (or close to it), which will significantly reduce our operating costs.

We estimate that it will be the second largest revenue stream coming from the installation of the CleanCarbon Waste-to-Energy systems.

Revenue streams

3. Black carbon production

UHTG installations also produce black carbon as a byproduct of their operations. This is pure molecular carbon widely used in the photovoltaic industries worldwide as a coating layer for solar panel cells.

CleanCarbon will be selling and shipping our produced black carbon, adding an extra stream of generated income.

4. Lactic acid

Fuerteventura is famous for the local production of goat cheese; it is the second branch of the local economy after tourism.

However, during the manufacturing process, large quantities of lactic acid are being produced, which is toxic to the environment. Recently, the local government had to step in and impose fines on the largest goat cheese producers, as they've been notoriously disposing lactic acid into the ground.

CleanCarbon will offer a solution for this; the collected lactic acid will be used as a moisturizing agent, necessary in our UHTG processes. We will gladly collect it from the local farmers, together with the disposal fee.

5. Hydrogen car rental

Having larger quantities of hydrogen on demand opens the door to another exciting business model. Fuerteventura is one the best-known holiday destinations in Europe, and as a result, over 1 million tourists visit the island every year. This is over five times the number of its local population.

We are already in talks with car manufacturers such as Toyota to order a fleet of hydrogen cars, to start a premium car rental company, and provide the necessary fuel for the rented vehicles.

Expansion plans

After the Pilot Project in Fuerteventura is completed and our business model is tested, we will begin our expansion.

We expect the first installation (the Pilot Project) to be fully operational in less than a year. Then, each new expansion should be quicker to build due to our growing experience and specific know-how in the field of UHTG systems.

The first chosen locations for expansion will be the other two large Canary Islands, Gran Canaria and Tenerife.

We have already held many meetings with key partners and local officials in Gran Canaria, which turned out to be very promising.
Additionally, one of our business partners is already helping us to reach the key contacts in Tenerife.

After the three largest Canary Islands, the next step will be global expansion. Our business model involves worldwide partnerships and commission-based franchise models to accelerate our global growth.

All future CleanCarbon expansions will always benefit token holders.

CARBO token

CARBO is a modern asset-backed BEP20 token that lives on the Binance Smart Chain network. The Smart Contract has been efficiently programmed and professionally audited to ensure there are no security vulnerabilities or other potential threats buried in the code.

CARBO token exists to represent the value of the CleanCarbon companies, generate financial profits for its holders, connect with Waste-to-Energy installations and offer many utilities for physical parts of the project.

Total Supply of CARBO = 500,000,000

No additional tokens can ever be created and added to the circulation.

If any tokens are left after the presale phase, they will get burned during our regular burning events and given out to users in the form of airdrops.

Physical CARBO utilities

As we are connecting CARBO with the physical installations that solve important problems, we are building the presence of our token in the world around us.

1. Payment system

We have already established first deals with some of our contractors and partners to use CARBO token as a payment method between us.

Using CARBO in physical world helps to spread the awareness about our project, boosts its economy and benefits every user, each time CARBO token is exchanged back into fiat currency.

2. Rewards for activities

Each place the CleanCarbon project is constructed is slightly different and have different problems and needs.

CleanCarbon will identify how to reward local communities for the activities that support our vision and get us closer to a cleaner and more decentralized planet.

Our physical token utilities will always be implemented locally first, to establish proof of concept and then exported globally to broader audiences.

Additional physical utilities will also be created over time and used in places where they are needed.

CleanCarbon platform

CleanCarbon platform consists of several tools that give the token useful additional utilities. All CARBO utilities are collected in one place, and easily accessible via simple connection with our platform and the Metamask wallet.

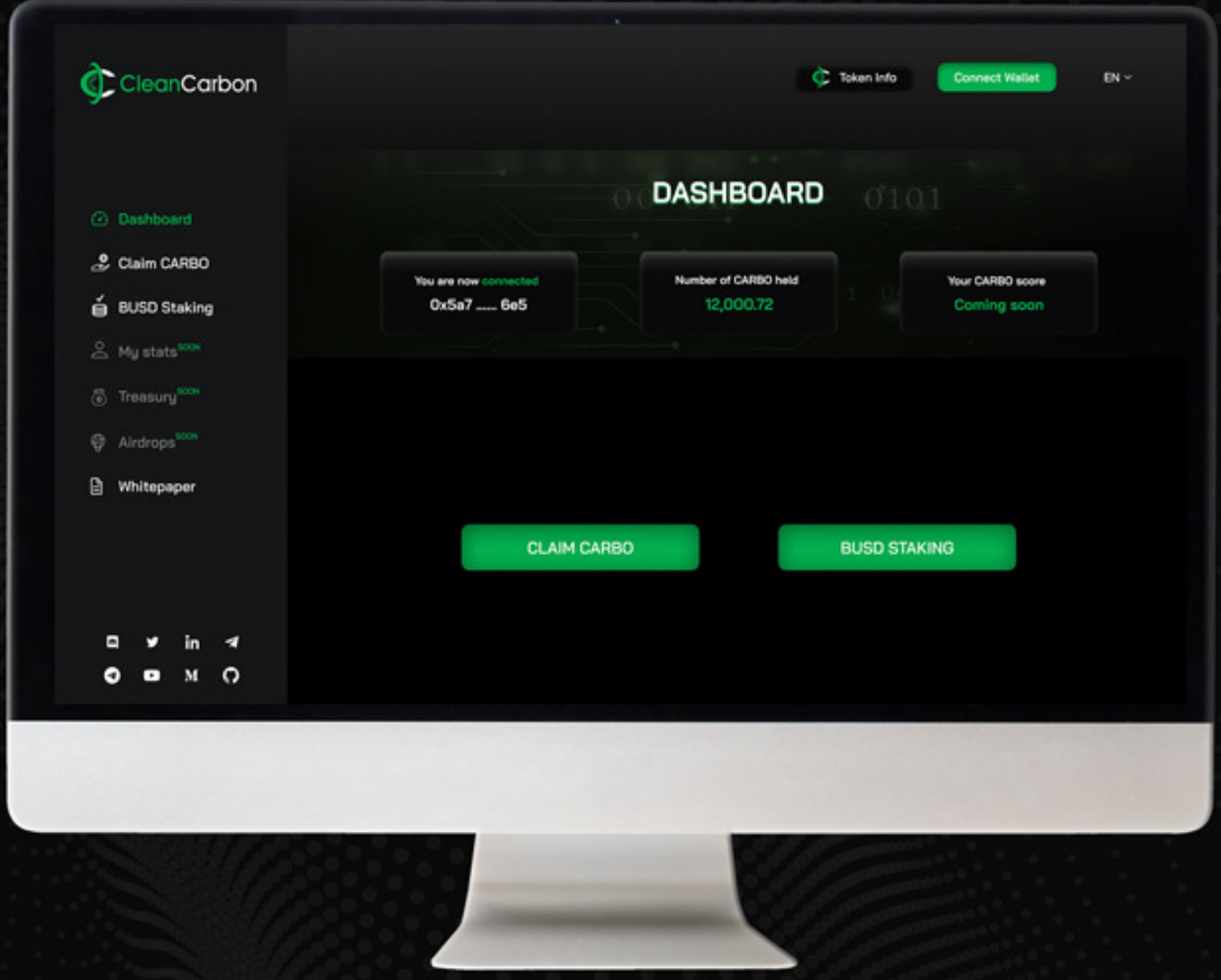

We are currently working on:

- Ability to claim CARBO purchased at presale
- Ability to claim staking rewards in BUSD
- Useful global and individual network stats
- CARBO score
- CARBO airdrops
- DAO platform

We are building the platform as a long-term project with additional functionalities being added over time. We hope that the community will help us in the future by sending us feedback and new ideas.

CleanCarbon platform

We are programming a unique system that will reward community for their support and the level of engagement in the CleanCarbon project.
We call it - CARBO score.

Every two weeks our system will make a snapshot of the whole CARBO network and will assign a numerical score to everyone. The higher the score, the more attractive rewards!

CARBO score will initially be based on three factors:

1. Recent behaviour

The CARBO score will greatly depend on the user's activities and behaviour.
We will reward purchasing, holding and not selling CARBO tokens.
This will be initially the most important factor determining the CARBO score.

2. CARBO locked

We are building a tool to lock CARBO tokens in various programs.
Locking will offer a chance to participate in many unique activities, such as contests, airdrops and more. The rewards will be worthwhile.

3. CARBO held

The CARBO score will also depend on the number of tokens held in the wallet.
This way we want to say thank you to the largest CARBO holders, who believe in our project and decided to support it.

We believe this will offer fun and engaging form of participation in our project, where diverse profit strategies will exists, and users will be rewarded for their creativity, and thinking outside of the box.

Our CARBO score system will evolve over time as we listen to our community.

CleanCarbon platform

Another CARBO utility we are developping is a project's DAO platform.

We want everyone to feel that CARBO token belongs to the community! Therefore, we will introduce several tools for users to influence the company's direction in a real and meaningful way.

Every CARBO holder will have the right to be actively involved in the decision-making process. The number of votes each user will receive will depend on the number of CARBO tokens you have and other factors.

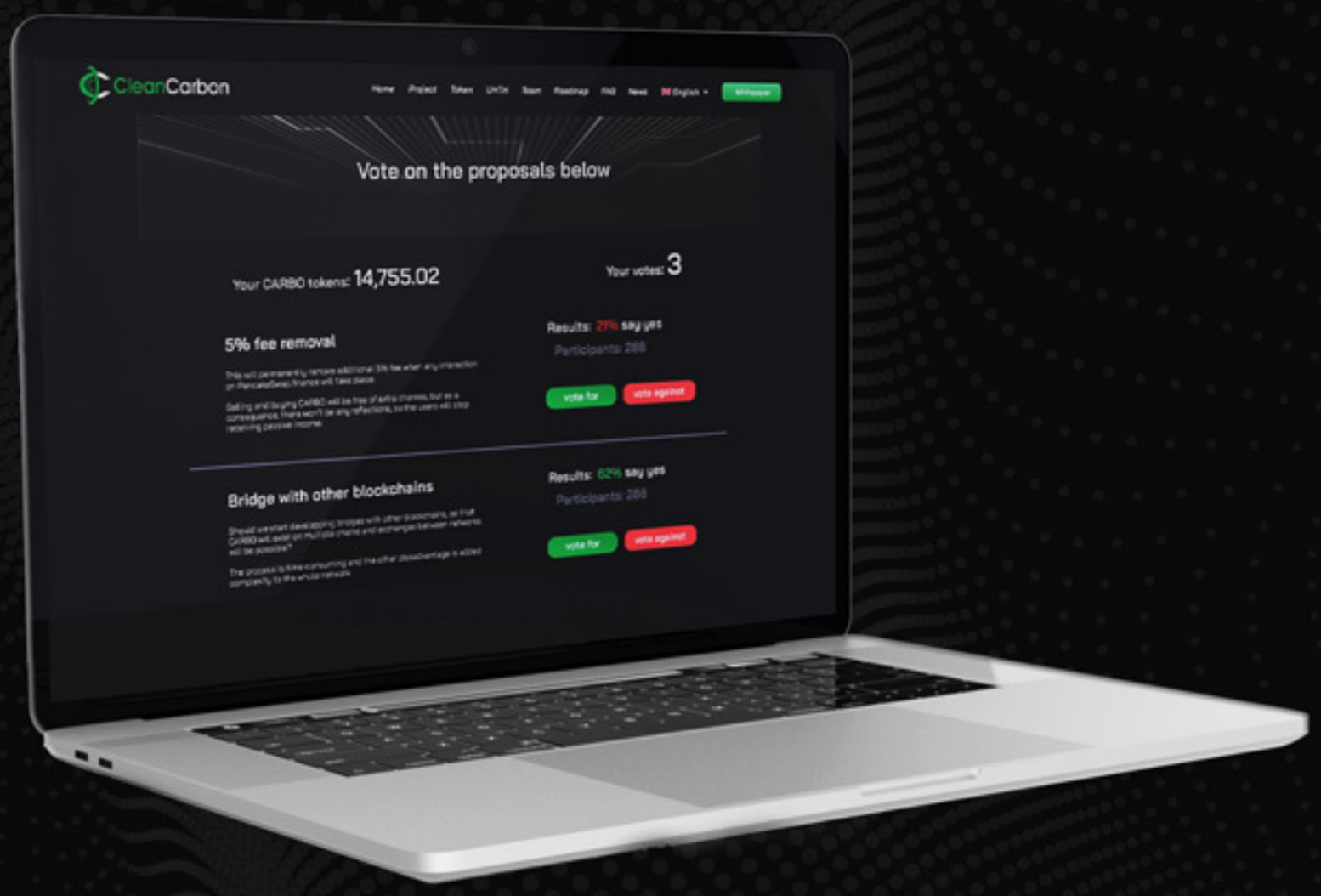

Our governance system will consist of several tiers and will offer more voting power and a better chance of winning in various contests to users who have the most tokens and support CleanCarbon project in other ways.

Community voting will be the first tool inside the CleanCarbon platform, and the functionality of the platform itself will be significantly expanded over time.

Mobile app

In parallel to the development of our platform, we have also started to build the CARBO mobile app. It will share many functions with the platform, but will also offer many unique feautures.

CARBO wallet

The release of our dedicated CleanCarbon app is scheduled for the second quarter of 2022.

The app will be a fully functional crypto wallet. It will be safe, secure, and packed with many useful features:

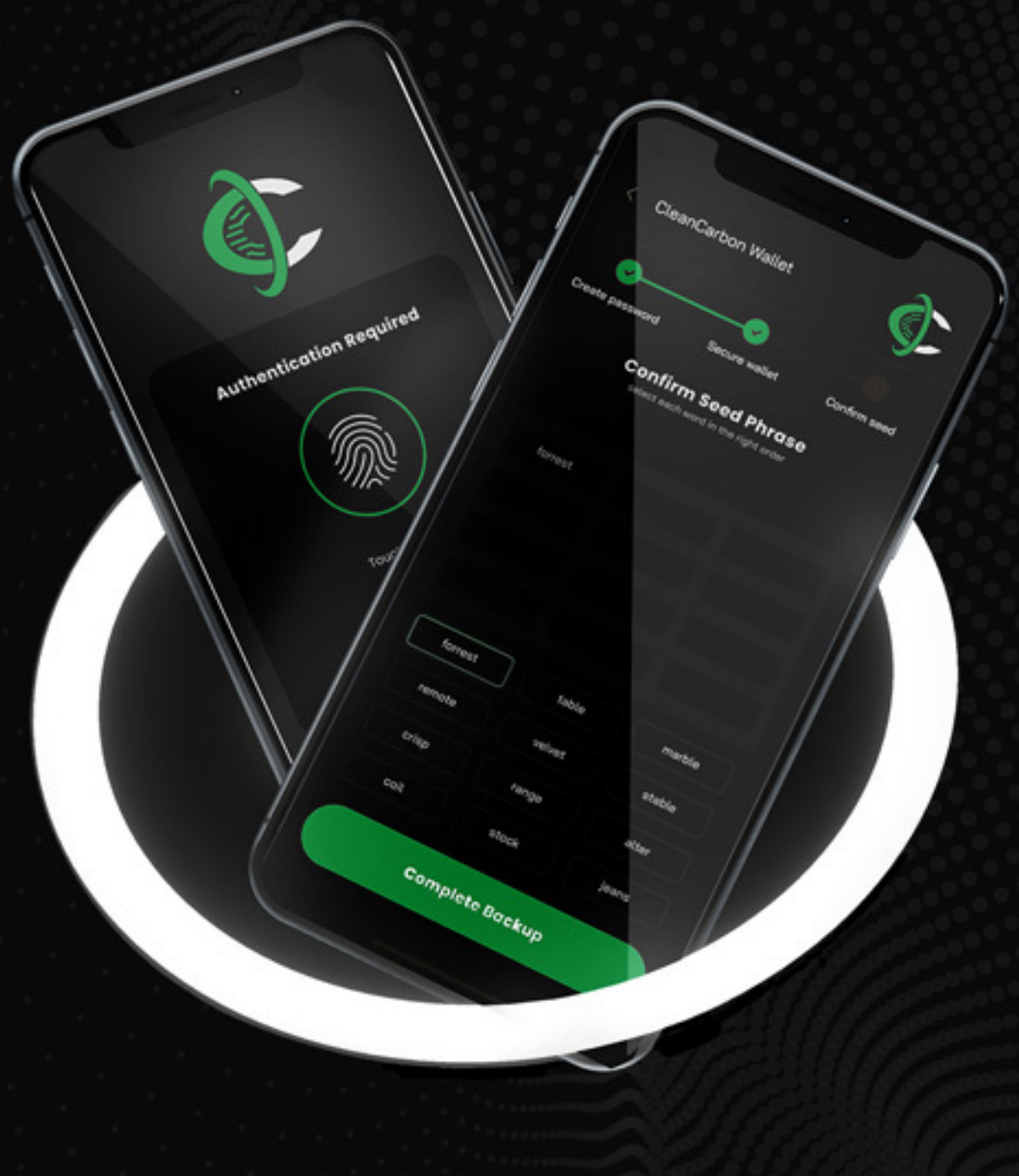

- Support of multiple chain protocols (BEP20, ERC20 and more...)
- Support of multiple wallets with the ability to easily switch between them
- Advanced stats for CARBO token, showing both streams of passive income and more
- Ability to easily trade CARBO and other tokens with just a couple of clicks
- Clean and modern design that, blends in perfectly with the rest of CleanCarbon products
- Integration with CleanCarbon platform, showing live income streams coming from multiple UHTG installations (in future)

Plus much more...

CleanCarbon treasury

Part of the funds collected during the presale and a small chunk of the fees from every transaction will be kept as the CleanCarbon treasury fund.

The purpose of the treasury is to ensure we have enough funds to grow the project indefinitely and have additional ways to boost CARBO price.

How the treasury will invest its funds:

Investment in Blockchain startups (approx. 30%)

Part of the treasury will be invested in startups at early stages, gems with enormous profit potentials. Each project will be thoroughly researched, and only the best ones and the ones aligned with the company's vision will get the attention of our treasury fund.
The CleanCarbon community can also suggest us new exciting projects.

High risk - large profits

Crypto trading (approx. 30%)

This will consist primarily of buying the dips of major cryptocurrencies and cashing out the profits when they reach 10-20%. Then, we will repeat the process each time the favorable market conditions present themselves.

Medium risk - medium profits

Stablecoins staking and liquidity pools (approx. 40%)

Some of the treasury's funds will also be used in various staking platforms to generate steady passive income in the years to come. In this way, we will only invest in stablecoins to ensure the security and stability of our funds. We may also invest in Liquidity Pools of selected major cryptocurrency pairs.

Low risk - low profits

Built-in incentives

CARBO transactions between regular wallets, to and from CEXs, and use of any CARBO tools will always be free (subject only to BSC network fees).

The extra fees are added only when interacting with PancakeSwap Smart Contract, namely when users buy or sell CARBO tokens.
There is a 5% buy fee or a 5% sell fee in this case.

5% Buy fee - The user sends BUSD and receives CARBO

3% - Daily staking (BUSD)
1% - PancakeSwap Liquidity
0.5% - BuyBacks
0.5% - Treasury (Investments, Marketing, Charities)

5% Sell fee - The user sends CARBO and receives BUSD

4% - RFI staking (CARBO)
1% - PancakeSwap Liquidity

We believe CARBO offers an excellent fee system that encourages HODLing. At the same time, the fees are not too high to discourage users from actively trading the CARBO token, which helps its entire economy.

There is no need to lock CARBO tokens, stake them or store them in any specific wallets. Instead, our incentive mechanisms are built directly into the Smart Contract and work automatically, for everyone, and always.

Built-in incentives

CARBO token incorporates six incentives' mechanisms to ensure the growth of the project and attractive rewards to the holders.

PASSIVE INCOME

Daily rewards (BUSD)

The most convenient form of passive income that can be claimed directly from our platform every 24 hours in stablecoin - BUSD. The rewards are being distributed proportionally to the number of CARBO tokens held. The funds are being collected from every buy transaction taking place on PancekeSwap.

Instant reflections (CARBO)

CARBO reflections are being distributed automatically with every sell transaction on PancekeSwap, in proportion to the number of held CARBO tokens. These reflections don't come as separate transactions; instead, the number of CARBO tokens conveniently grows over time in every user's wallet.

PRICE BOOSTERS

Buybacks

Buybacks are regular monthly events run by CleanCarbon company. During these events, CARBO tokens are being purchased from PancakeSwap and stored for future burning events. Buybacks occur randomly throughout each month but always come from the same Buyback wallet.

Burning events

Burning events create deflation and scarcity as fewer and fewer CARBO tokens remain in circulation. They positively reflect on the long-term CARBO price and the overall project's economy. The burning events are always done manually, at the right moments. We believe this approach is more beneficial than an automatic burning mechanism with every transaction.

Built-in incentives

CARBO Treasury

Every buy transaction on PancakeSwap helps to grow the treasury. The majority of the treasury funds will be invested in various crypto projects to generate extra income to sustain and grow the CleanCarbon project.

In addition, part of the treasury funds will be spent on marketing to finance various promotional campaigns and ensure that our project can support itself and continuously develop.

We believe each successful business should also give back to the community and support important causes.
Therefore, CleanCarbon pledges to give regular donations to the most effective charities worldwide from its treasury funds.

We are aligned ideologically with the effective altruism movement and givewell.org portal, which we use to find the most effective charities.

PancakeSwap Liquidity

The size of CARBO/BUSD liquidity pool on PancakeSwap automatically grows over time, as a small part of every transaction fuels it. It protects the price of CARBO from sudden drops and therefore increases the token's stability.

If liquidity exceeds a certain threshold, some funds can be withdrawn and used to buy back CARBO on PancakeSwap.
These tokens will be burned, further boosting the token's price.

EXTRA BENEFITS & FEATURES

Furthermore, all the above mechanisms can later be switched off entirely if the company and the CARBO community decide they are no longer beneficial to the project.

Turning the fees off will be determined by the community voting.

CARBO resilience

Crypto markets move in cycles. Every bull-run is followed by significant price corrections or even a crypto winter that can last for months or years.

We want to be independent of the crypto cycles, and therefore CARBO token has been created from the ground up, so it's utterly immune to the changing market conditions.

No crypto trading dependencies

CARBO token is only paired up with BUSD for its Buy and Sell orders, either on PancakeSwap or future CEXs.

This way, prices changes of any cryptocurrencies should not affect the price of CARBO. Even significant price drops of cryptocurrencies such as BTC, ETH, or BNB should have minimal impact on the value of CARBO.

Rewards only in BUSD and CARBO

Our smart contract sends staking rewards to the users only in BUSD and native CARBO tokens. Therefore, there is no need to deal with any other cryptocurrencies, and hence no price dependencies exist.

Multiple price boost mechanisms

CARBO has implemented the following tools to ensure the price will be protected against unforeseen events:

- Regular BuyBacks by the CARBO treasury will drive prices up at strategic moments
- Income from our physical Waste-to-Energy installations partially removes our project's dependence on the cryptocurrency markets
- Endless marketing from the treasury funds will ensure there are always new users discovering CARBO token
- Regular burning events that create scarcity, cause deflation and increase passive income streams for CARBO holders

Token distribution

CARBO tokens will be distributed according to the figures below:

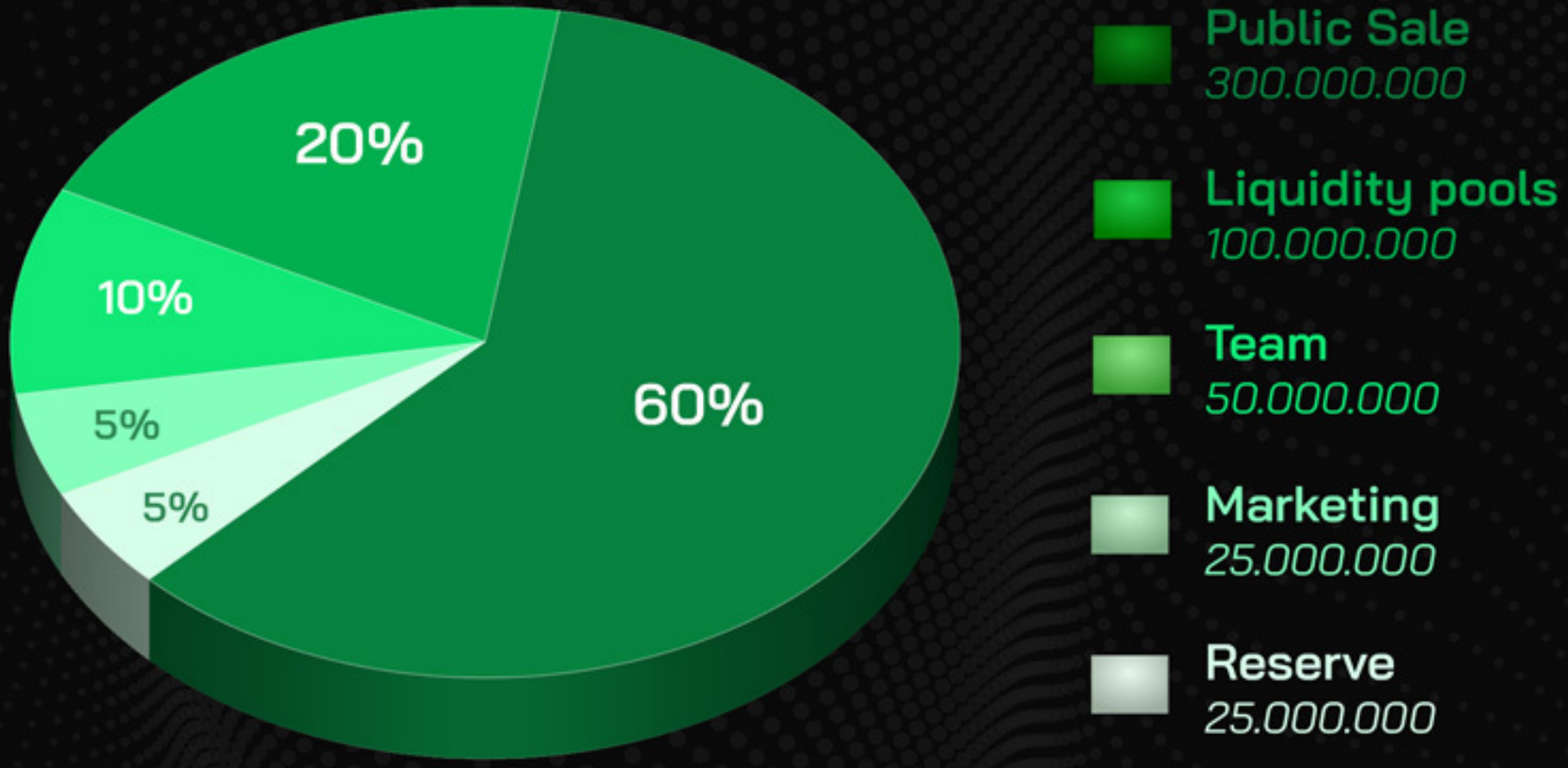

Public Sale - 60%

These token will be distributed to the public and freely tradable on exchanges.

Liquidity pools - 20%

These token will be used for PancakeSwap liquidity pools and other CEXs.

Team - 10%

Team tokens are locked for 25 months; each month 4% is being released.

Marketing - 5%

Marketing tokens are partially locked and will be used to promote CARBO.

Reserve - 5%

Company reserve will only be used in unlikely scenarios of great emergencies.

Global presale

The global presale of CARBO is scheduled for:

April 2022

(the exact date will be announced soon)

Users who wish to participate in presale need to whitelist their BEP20 address using our website. The exact link will be posted on the website CleanCarbon.io and on our Discord server closer to the launch date.

The initial price during the presale will be around $0.04 and only BNB will be accepted.

The hard limit of max allowed purchase per user is 50 BNB to ensure whales and bots can't purchase too many CARBO tokens.

Each user is allowed to whitelist only one BEP20 address. We reserve the right to perform additional verification to ensure that nobody is cheating. People who add multiple addresses will lose the right to participate in the presale.

The presale will last seven full days, or until we reach the hard cap of **$ 12.000.000 in BNB.**

All CARBO tokens will be distributed automatically by our Smart Contract right after the launch on PancakeSwap, which will take place a few weeks after the end of the global presale. Presale buyers will also receive a special surprise for early support and faith in our project.

To stay up to date, join our Discord server:

https://discord.gg/nYk3n9vE5D

Additional funding

Reserve Investment in the Canary Islands

The Reserve for Investments (RIC) is one of the main incentives of the Canary Islands Economic and Fiscal Regime (REF in Spanish). The RIC is a tax advantage for companies and Individuals located in the Canary Islands that enables reductions on direct taxation (up to 90% of profits).

This creates tremendous opportunities for local companies to invest in the CleanCarbon project. Furthermore, large companies in Fuerteventura, such as hotels and resorts, are actively searching for RIC opportunities, as this type of investment can be directly deducted from their paid taxes.

The funds obtained from RIC investments will be used to speed up the project's expansion.

In addition, Europe aims to be the first climate-neutral continent by becoming a modern resource-efficient economy. As a result, they plan to reduce net greenhouse gas emissions by at least 55% by 2030 and have 0 net emissions of greenhouse gases by 2050.

The EU has also introduced limits for the amount of waste that can be sent to landfills to the necessary minimum by creating financial incentives for companies to find other, more sustainable solutions.

https://ec.europa.eu/environment/topics/waste-and-recycling/landfill-waste_en

https://ec.europa.eu/info/strategy/priorities-2019-2024/european-green-deal_en

Projects such as CleanCarbon are directly aligned with the EU vision, and hence should easily receive various forms of support.

Additional funding

CleanCarbon is also entitled to receive additional funds:

European Union subventions

Based on our extensive research, we believe that CleanCarbon project is also entitled to the European Union subventions.
As a result, we should receive a grant of up 80% of our initial investment capital.

These extra funds will help us expand much faster, further benefiting the whole token economy and every investor involved in the project.

With the help of our dedicated subvention partner, we are already preparing all relevant documents to apply for the EU funds.

Venture Capital investor

The Spanish branch of CleanCarbon Solutions SL is backed by a Venture Capital investor, who has offered to help finance the project if extra funds are needed after the CARBO presale.

If our presale goes as planned, these extra VC funds will first be used to construct our Research & Development facility, where a smaller T6 unit will be placed, and later to speed up our expansion rate.

Being backed by a VC investor from outside the blockchain space ensures the CleanCarbon project will be constructed, regardless of the outcome of our token launch.

Revenue forecast - UTHG systems

An approximate revenue forecast per unit per year of operation

Income	Pessimistic	Realistic	Optimistic
Waste fees & saved logistics 25 t/day - 330 days	660.000 €	990.000 €	1.320.000 €
H2 production	1.273.212 €	1.591.515 €	1.909.818 €
Overlapping Heat used for Lactic Acid drying	1.118.738 €	1.491.650 €	1.864.563 €
Byproducts	132.000 €	158.400 €	190.080 €
Total	**3.183.950 €**	**4.231.565 €**	**5.284.461 €**

Costs	Pessimistic	Realistic	Optimistic
Salaries (incl. costs, holidays, and illness days) in 3 shifts	220.800 €	220.800 €	220.800 €
Cost of H2 separation and compression	318.303 €	397.879 €	477.454 €
Power consumption	118.800 €	142.560 €	171.072 €
R. Schmitt ENERTEC 450kW engine maint. costs, (parts & labor)	62.726 €	78.408 €	94.090 €
Software updates, exchange of temperature sensors & lubricants	84.000 €	84.000 €	84.000 €
Reserve per year for reactor replacements every 24 months	180.000 €	180.000 €	180.000 €
Unforeseen costs	100.000 €	100.000 €	100.000 €
Total	**1.084.629 €**	**1.203.647 €**	**1.327.416 €**

	Pessimistic	Realistic	Optimistic
Total profits	**2.099.320 €**	**3.027.918 €**	**3.957.045 €**

Expected profits per year per installation **3.028.094,44 €**

Although we've tried to be conservative in our calculations, assuming bad-case scenarios, the obtained results may differ from our estimations.

Therefore, this is by no means guarantee of any future results!

Revenue forecast - CARBO Treasury

An estimated forecast of CARBO treasury growth in 2022

Initial treasury	Pessimistic	Realistic	Optimistic
Initial treasury balance	**2.500.000 $**	**4.000.000 $**	**5.000.000 $**
Collected from network fees	912.500 $	1.825.000 $	3.650.000 $
Network fees after 80% spent	182.500 $	365.000 $	730.000 $
PancakeSwap Liquidity pool (initial $1M)	**328.500 $**	**657.000 $**	**1.314.000 $**
Startup investments	average 20% profit	average 60% profit	average 180% profit
Q2 Investments profit	150.000 $	450.000 $	1.350.000 $
Q3 Investments profit	180.000 $	540.000 $	1.620.000 $
Q4 2022 Investments profit	216.000 $	648.000 $	1.944.000 $
Crypto trading	0% profit per Q	20% profit per Q	40% profit per Q
Q2 Trading profit	0 $	240.000 $	480.000 $
Q3 Trading profit	0 $	288.000 $	672.000 $
Q4 Trading profit	0 $	345.600 $	940.800 $
Stablecoins staking	2% per Q	3,5% per Q	5% per Q
Q2 Staking profit	32.000 $	56.000 $	80.000 $
Q3 Staking profit	32.640 $	57.960 $	84.000 $
Q4 Staking profit	33.293 $	59.989 $	88.200 $
Total profits	**1.154.933 $**	**3.707.549 $**	**9.303.000 $**
Average expected treasury growth			**4.721.827,13 $**

The treasury will only used to grow the CleanCarbon project and boost the price of the CARBO token.

The actual results may and most likely will vary from these estimations, and therefore, we do not guarantee any future results.

The legal structure

The CleanCarbon project consists of two legal entities to ensure every part of the project's development is done in full compliance with the relevant regulations.

1. CleanCarbon FZCO is registered in Dubai in the Digital Silicon Oasis zone.

The company is licensed to offer IT-related and blockchain services.
It has been founded with an initial capital of $200k, so that we don't need to rely solely on CARBO tokens and our investors.

2. CleanCarbon Solutions SL is registered in Fuerteventura, Spain.

The company is responsible for the physical installations, first in Fuerteventura, then on the other Canary Islands, and later beyond.
The Spanish branch is directly backed by a VC investor who offered to finance the project as much as needed after the token presale.

Both companies are already fully operational.

Core Team

Executive positions

Udo Abraham CEO / Co-founder

Udo has a Degree in Statistics & Economics, specializing in Risk Analysis, with over ten years of experience in managing and consulting companies in the Canary Islands. Udo's been involved in the renewable energy sector since 2016 and in crypto since 2018, Co-Founder of Workandsun Canarias.

Michal Pomykala CTO / Co-founder

Michal is a multi-disciplinary crypto wizard who is actively involved in the cryptocurrency sector since early 2012, first as a trader, later as a developer. Michal has been working as the CTO of Tenset, responsible for the project launch and former CEO of FuerteCoin, a blockchain startup in Fuerteventura.

Jose L. Camino Carmona Chief Engineer

Camino has a degree in Engineering and over 16 years of experience in renewable energies and construction. Together with his international team of engineers and two companies Soluciones Energeticas Canarias and Proditec SL, he has built many renewable installations in Fuerteventura.

Dominik Dąbek Marketing Director

Dominik is a dot connector, involved in blockchain space since early 2018. He's also a crypto investor who graduated from the Moralis Academy. While collaborating with many well-known influencers Dominik helped to launch other crypto projects. He is responsible for the coordination of our marketing efforts.

Core Team

Heinz Hoffmann Project Manager

Heinz is a Bachelor of Science (B.Sc.) in commercial informatics, business analytics, and online marketing, who successfully managed multiple large-scale B2C/B2B projects in the telecommunication and insurance industries. Involved in crypto since early 2017.

Kim Minhoe Graphic Designer

Kim is a multidisciplinary, full package graphic designer with over 12 years of experience recently specialized in blockchain projects and NFTs. He has worked with major companies and corporations such as Samsung, LG, Dunkin' Donuts, and Ford, amongst many others.

Phillip Berg Video Producer

With a love for visual storytelling and 20 years of experience, Phillip is a world builder specializing in cinematography, lighting, and conveying a visual narrative through the lens. He has a strong passion for creating stunning visuals, accompanied by a range of visual effects.

Angela Cadei Office Manager

Angela is our office and partnerships manager, with 12 years of experience in the world of Renewable Energies in the Canary Islands and beyond. Angela is well versed in finance and relationships management and is used to taking care of office 360º responsibilities.

Víctor A.S. Delgado-Yumar Taxes & Legal Advisor

Víctor is an Economist with a Law Degree, who is currently the managing partner of the firm Delgado Yumar Asesores. Victor has experience in tax law, international laws, and blockchain, also advising businesses on all aspects related to the European and Canary Islands (REF) taxes.

The rest of the team members will be announced soon.

Roadmap

Q3 2021 - Complete

- Market research and analysis
- Validation of the business model
- First strategic partners
- First talks with local government
- Core team formation
- Creating a marketing strategy
- Establishing a 10-year vision
- CleanCarbon brand creation

Q4 2021 - Complete

- Company funding of $200k
- Financial backup by VC investor
- Assembling the rest of the team
- Final tokenomics creation
- Smart contract development
- Website creation in English
- Writing Whitepaper in English
- Company incorporation in Spain
- Company incorporation in Dubai
- The legal framework completed

Q1 2022 - In progress

- Official launch of CleanCarbon
- Launch of the SM channels
- Smart Contract Deployment
- Office in the Parque Tecnológico
- Smart Contract audit
- Website translations
- Whitepaper translations
- Government project approval
- Applying for the EU subventions
- Local partnerships established
- The first physical CARBO utility
- Open marketing channels

Roadmap

Q2 2022 - For future

- CARBO global presale
- CARBO token listing
- Launch of the CleanCarbon platform
- Launch on PancakeSwap
- The first burning events
- Creation of the CARBO treasury
- Start of the BuyBack program
- Launch on the first CEX
- Land purchase for the installation
- Pilot Project construction license
- UHTG T6 unit purchase for R&D
- UHTG T25 main unit purchase
- Pilot Project construction starts
- More website & WP translations

Q3 2022 - For future

- Extra funding from EU subventions
- New utilities for CARBO token
- Massive global marketing
- Community voting platform
- The first charities donations
- Pilot Project installation testing
- CleanCarbon mobile app completed
- Listing CARBO on the next CEX
- Legal framework of 1st expansion
- Buybacks and burning events
- Final website and WP translations
- First RIC investment offers

Q4 2022 - For future

- The Pilot Project is fully operating
- First buybacks from UHTG profits
- The new utility for CARBO token
- Large-scale charity donations
- More global strategic partnerships
- First blockchain summits
- Purchase of the next UHTG unit
- Start of the next installation
- The UHTG franchising blueprint
- Buybacks and burning events
- The first year of operation summary
- The new roadmap for 2023

Disclaimer

Participating in an IDO is a high-risk activity. Our offer is directed to experienced professionals who are familiar with blockchain technologies, cryptocurrency trading and trading other financial instruments such as stocks, derivatives, and forex.

By participating in this IDO, the investor should be aware and accepts the risks related to security and the potential lack of economic results. The participant declares being aware of the legal uncertainty of this type of transactions and to have conducted his/her research according to the applicable law to which he/her subscribes.

Anyone purchasing CARBO token acknowledges the technological and economic uncertainty of the project presented in the Whitepaper. Therefore, participants are aware of the absence of any legal action against the company in case of failure, nonperformance or non-implementation of the project, as well as in the case of the CARBO losing part or even the totality of its value. Purchase of the CARBO token confers the ability to use the coming CleanCarbon.io services.

No other rights are transferred upon the IDO. Precisely, the company's only obligation is to distribute the CARBO token under the conditions defined in the White Paper. During the IDO, the company can not be held liable for any of the following:

- Use of the service that is not compliant with the applicable terms;
- An error, malfunction, malicious action or violation of White Paper's terms by the user, a third party or service controlled by a third party;
- All direct or indirect damage that may occur during the operation: cryptocurrency losses, profits or financial losses or other damages whatsoever in the type;
- The loss of control, any reason (loss, hacking, unwanted disclosure or technical failure), of the users' login credentials which would lead a fraudulent use of the tokens;
- The temporary or permanent suspension of the service, whatever the cause, and especially due to a request from the public authorities, judicial authority or any third party;
- Computer failure resulting in loss of data, including content in case of impact;
- The professional activity of users;

www.CleanCarbon.io

Join our Discord server

Follow us on Twitter

Connect on LinkedIn

Join our Telegram channel

Follow news on Telegram

Subscribe to our Youtube channel

Visit our Github repository

v 2.0